1. LEASE LINE
2. (E) MALL NEUTRAL PIER TO REMAIN, G.C. TO PATCH AND REPAIR AS NECESSARY.
3. (E) MALL BULKHEAD TO REMAIN, G.C. TO PATCH AND REPAIR AS NECESSARY.
4. (E) GLAZING TO REMAIN.
5. OPENING OF (E) ROLLING GRILLE TO REMAIN. SEE A/A00.2 FOR DOOR SCHEDULE.
6. (E) ILLUMINATED VS SIGNAGE TO REMAIN.
7. (N) LIGHTBOX TOWER FIXTURE.
8. (E) MARKETING RAILS TO REMAIN.
9. (N) MARKETING GRID SHOWN DASHED ABOVE, REFER TO H/A11.7.
10. NOT USED.
11. (N) PINK SIGNAGE - FLAT PLANK SIGN PANEL, SIZE AS INDICATED IN ELEVATION, HORIZONTAL PLANKS TO MATCH PRE-PAINTED DISTRESSED PINK BACKGROUND AND PRE-PAINTED PN-CUPE IS AND 1IS LIKE AND 2IS VICTORIA'S SECRET LOGO - 4'-5"H NON-ILLUMINATED PINK LETTERS TO BE SURFACE-MOUNTED.
12. (N) 12" PINK RAISED DOG FOOTLIFT - OWNER SUPPLIED AND G.C. INSTALLED.
13. (N) PINK GOLDSAF VINYL WINDOW GRAPHIC APPLIED TO TENANT SIDE OF GLASS, CENTERED ON WINDOW. G.C. TO REMOVE ANY (E) VINYL GRAPHICS PRIOR TO INSTALLATION.
14. G.C. PATCH, REPAIR, OR REPLACE (E) DOOR HARDWARE AS NECESSARY.
15. G.C. TO CHANGE OUT DOOR PATCH WHEEL, BOTTOM RAIL HARDWARE TO BRUSHED ALUMINUM TO MATCH EXISTING.
16. (N) KING-BOY WALLCOVERING TO BE INSTALLED AT ENTRY PORTAL WALLS AND CEILING. PKD-5574N.
17. FINISH TRANSITION LINE BETWEEN VSC AND PINK TO BE AT INSIDE CORNER.
18. (E) VENEER ACRYLIC PLASTER SURFACE TO BE PAINTED CONVE MILK. P-46(NN).
19. LOCATION OF (E) ROLLING GRILLE KEY SWITCH
20. (E) METAL MULLIONS, EXTRUSIONS, TRIMS OR METAL PANELS TO REMAIN.
21. (E) METAL MULLIONS, EXTRUSIONS, OR METAL PANELS TO BE PAINTED BLACK. P-78(NN).
22. (E) METAL MULLIONS, EXTRUSIONS, OR METAL PANELS TO BE PAINTED CONVE MILK. P-78(NN).
23. (E) GRANITE TILE BASE TO REMAIN. SF-3T
24. (N) FORMICA BASE - G.C. TO BE PAINTED CONVE MILK. P-78(NN).
25. (N) TWO-SIDED CURTAIN w/ 'BLACK CHERRY' ON VSL ROOM SIDE AND DISPLAY WINDOW SIDE. REFER TO H/A11.7
26. (N) TWO-SIDED CURTAIN w/ BLACK ON VSL ROOM SIDE AND CONVE MILK ON DISPLAY WINDOW SIDE. REFER TO H/A11.7
27. (N) TWO-SIDED CURTAIN w/ BLACK ON VSL ROOM SIDE AND PINK ON DISPLAY WINDOW SIDE. REFER TO H/A11.7
28. (N) TWO-SIDED CURTAIN w/ CONVE MILK ON VSL ROOM SIDE AND DISPLAY WINDOW SIDE. REFER TO H/A11.7
29. (N) TWO-SIDED CURTAIN w/ CONVE MILK ON VSL ROOM SIDE AND BLACK ON DISPLAY WINDOW SIDE. REFER TO H/A11.7
30. (N) TWO-SIDED CURTAIN w/ CONVE MILK ON VSL ROOM SIDE AND PINK ON DISPLAY WINDOW SIDE. REFER TO H/A11.7
31. (N) TWO-SIDED CURTAIN w/ PINK ON VSL ROOM SIDE AND DISPLAY WINDOW SIDE. REFER TO H/A11.7
32. (N) TWO-SIDED CURTAIN w/ PINK ON VSL ROOM SIDE AND BLACK ON DISPLAY WINDOW SIDE. REFER TO H/A11.7
33. (N) TWO-SIDED CURTAIN w/ PINK ON VSL ROOM SIDE AND CONVE MILK ON DISPLAY WINDOW SIDE. REFER TO H/A11.7
34. (E) PREFINISHED METAL PANELS AT PORTAL. SF-2C
35. (E) PREFINISHED METAL TRIM. SF-2C
36. (E) 3" AGGREGATE W/ FREEFORM ACRYLIC. SF-3T
37. (E) PLASTER FINISH TO BE PAINTED. P-46
38. (N) VSS SIGNAGE- 10 1/2" X 15'-1 1/8" ILLUMINATED SIGN BOX SYSTEM WITH 3/4" CLEAR PLEX PUSH-THROUGH LETTERS WITH PINK ACRYLIC DIFFUSERS AND 1/8" ALUM. ROUTED PANEL PAINTED TO MATCH PREFINISHED METAL PANELS SEE STOREFRONT.
39. (N) SEAM LOCATION
40. (N) STAINLESS STEEL APPLIED SIGNAGE.
41. RIBBON PINK VINYL APPLIED TO BACK OF GLASS.
42. NEW LUMISHEET ASSEMBLY WITH PRINTED POLYCARB. 1" OPAQUE VINYL BORDER APPLIED TO BACKSIDE OF (E) GLASS. REFER TO M/A08.3
43. (N) PRE FINISHED METAL BLACK PANELS AT VS PORTAL. SF-5R
44. (N) LIGHT BOX PANEL. SEE INTERIOR ELEVATIONS AND ELECTRICAL PLANS.
45. (E) GRANITE TILE BASE TO BE REMOVED AND REPLACED WITH (N) GRANITE TILE BASE. SF-3T

STOREFRONT KEY NOTES

1/2" = 1'-0" | D

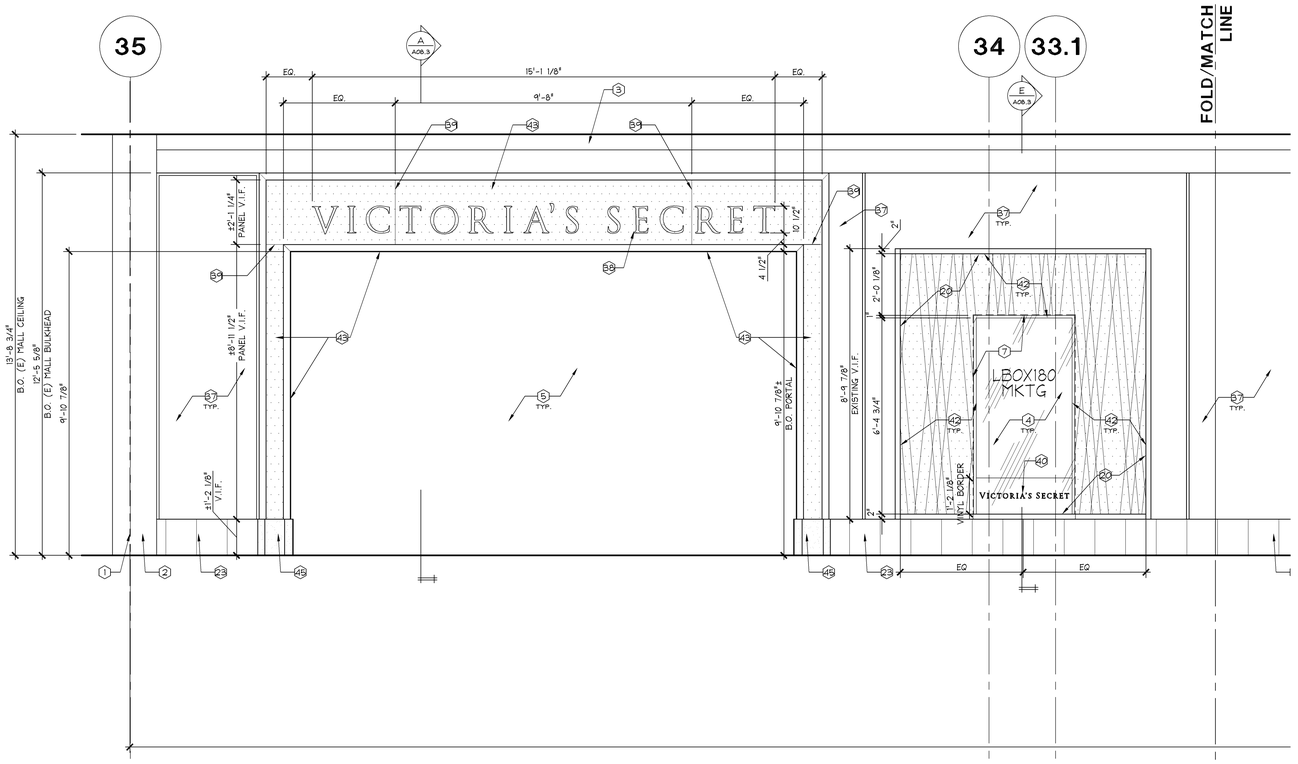

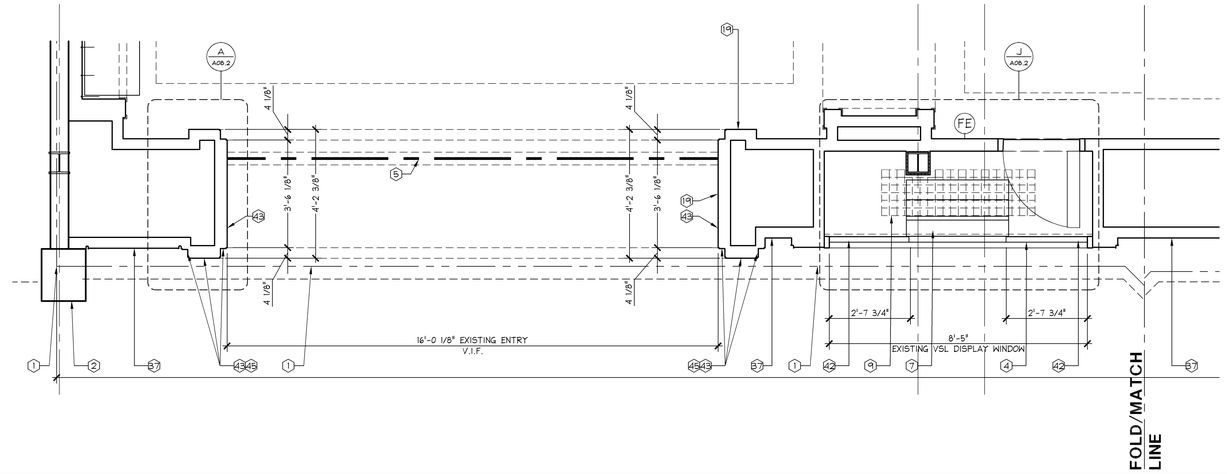

VSS - STOREFRONT ELEVATION

1/2" = 1'-0" | A

Stantec
Stantec Architecture Inc.
1383 N. McDowell Blvd., Suite 250
Petaluma, CA U.S.A. 94954
Tel. 707.765.1660 Fax. 707.765.9908
www.stantec.com

Limitedbrands
LIMITED STORE PLANNING, INC.
d/b/a STORE DESIGN & CONSTRUCTION
Three Limited Parkway · Columbus, Ohio 43230
Telephone: 614.415.7000 · Fax: 614.415.7349

PROMOTION AND USE:
THESE DRAWINGS AND SPECIFICATIONS WERE PREPARED FOR USE ON A SPECIFIC SITE, CONTEMPORANEOUSLY WITH THEIR ISSUE DATE. THEY ARE NOT INTENDED FOR USE ON A DIFFERENT PROJECT OR AT A LATER DATE. THE ARCHITECT DISCLAIMS ANY RESPONSIBILITY FOR SUCH USE.
OWNERSHIP OF DOCUMENTS:
THESE DRAWINGS AND SPECIFICATIONS ARE THE PROPERTY OF LSDC AND SHALL NOT BE DUPLICATED IN WHOLE OR IN PART WITHOUT THE WRITTEN PERMISSION OF LSDC. THESE DRAWINGS AND SPECIFICATIONS MAY NOT BE REPRODUCED IN THESE DRAWINGS AND SPECIFICATIONS SHALL BE MADE WITHOUT THE WRITTEN PERMISSION OF LSDC. ALL REPRODUCTIONS MUST BE RETURNED TO LSDC UPON COMPLETION OF THE WORK AUTHORIZED BY THESE DRAWINGS AND SPECIFICATIONS.
COPYRIGHT:
THESE DRAWINGS AND SPECIFICATIONS ARE COPYRIGHTED AND SUBJECT TO COPYRIGHT PROTECTION AS AN "ARCHITECTURAL WORK" UNDER SECTION 102 OF THE COPYRIGHT ACT OF 1990, 17 U.S.C. SECTION 101 AND THEREAFTER. THE COPYRIGHT PROTECTION INCLUDES, WITHOUT LIMITATION, THE OVERALL FORM, ARRANGEMENT AND COMPOSITION OF SPACES, AND OTHER ELEMENTS DESIGNED AS PART OF THE ARCHITECTURAL WORK. THE OWNERSHIP OF THE COPYRIGHT IN THE ARCHITECTURAL WORK INCLUDES, WITHOUT LIMITATION, THE OVERALL FORM, ARRANGEMENT AND COMPOSITION OF SPACES, AND OTHER ELEMENTS DESIGNED AS PART OF THE ARCHITECTURAL WORK. THESE DRAWINGS AND SPECIFICATIONS MAY NOT BE REPRODUCED IN THESE DRAWINGS AND SPECIFICATIONS MAY BE REPRODUCED IN CONSTRUCTION, BUILDING SECURE, AND/OR MONETARY LIMITS.

010500133

PROJECT INFORMATION:

VICTORIA'S SECRET
QUAIL SPRINGS MALL
SPACE NO.: 119
2501 WEST MEMORIAL RD.
OKLAHOMA CITY, OK 73134

SCOPE: OPTIMIZATION | PACKAGE: II
DESIGN TYPE: NMA/FORUM AA1 | GENERATION: R1315a/142Fa
LSD&C PROJECT #: 00060919 | A/E PROJECT #: 2007684006

REVISIONS:

REQUIRED BY:	DATE

ELITE CONSTRUCTION GROUP
LAKE JACKSON, TX
PHONE: 979-285-0712
NOTE: THESE PRINTS HAVE BEEN REDUCED BY 50 PERCENT. SCALE WILL BE 50 PERCENT OF WHAT IS NOTED ON PLANS

DATE ISSUED:	05.30.2014
DESIGNED BY:	KW
DRAWN BY:	MS
CHECKED BY:	DB/BV

STOREFRONT ELEVATIONS

DRAWING NUMBER:
A08.1